Physics 111 - Class 11B
Momentum & Impulse

November 16, 2022

Class Outline

- Logistics / Announcements
- Chapter 9 Section Summary
- Clicker Questions
- Worked Problems

Logistics/Announcements

- Lab this week: Lab 7
- HW9 due this week on Thursday at 6 PM
- Learning Log 9 due on Saturday at 6 PM
- HW and LL deadlines have a 48 hour grace period
- Test 4 available on Friday this week
  - Remember, **Test 4 will be done online!**

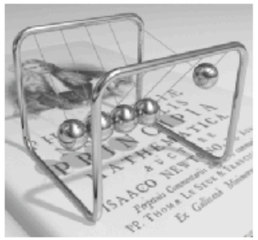

Physics 111

Content Summary from Crash Course Physics

Collisions

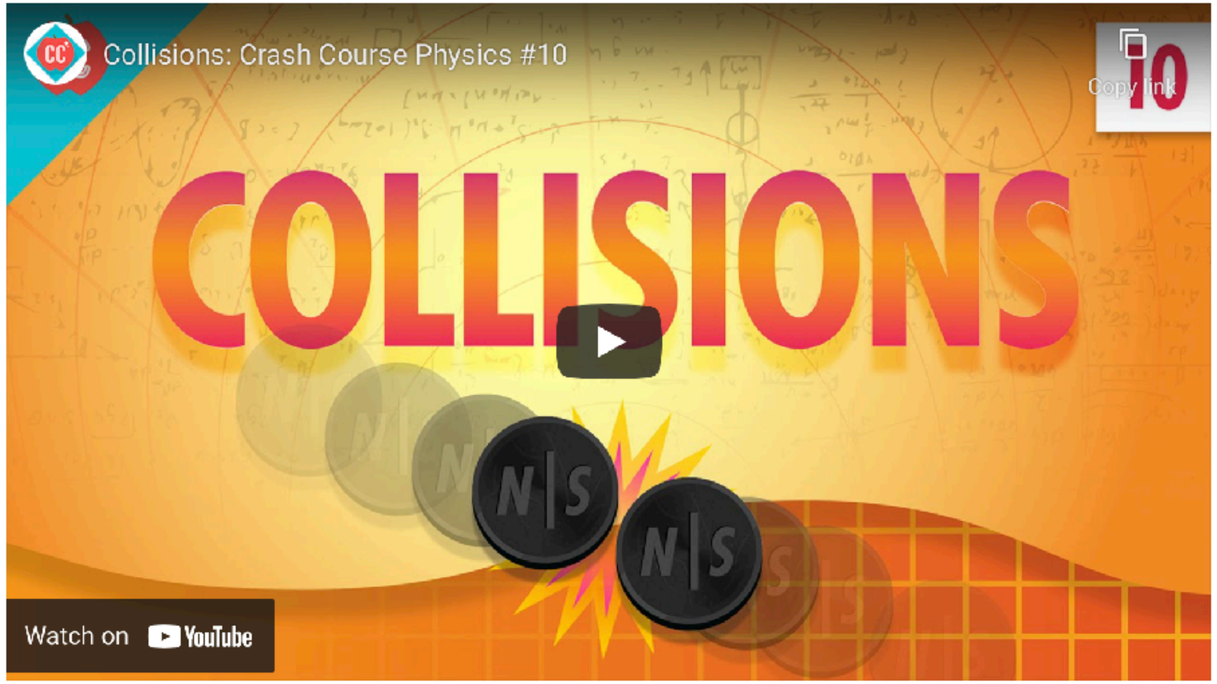

Required Videos

1. You Can't Run From Momentum! (a momentum introduction)

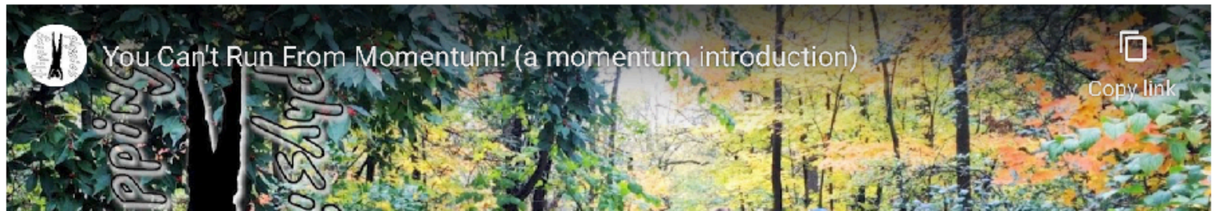

Checklist of items

- Video 1
- Video 2
- Video 3
- Video 4
- Video 5
- Video 6
- Video 7
- Video 8
- Video 9
- Video 10

Wednesday's Class

9.2 Impulse and Collisions
9.5 Collisions in multiple dimensions
9.7 Rocket Propulsion

Impulse

The product of a force and a time interval (over which that force acts) is called **impulse**, and is given the symbol $\vec{\mathbf{J}}$.

IMPULSE

Let $\vec{\mathbf{F}}(t)$ be the force applied to an object over some differential time interval *dt* (Figure 9.6). The resulting impulse on the object is defined as

$$d\vec{\mathbf{J}} \equiv \vec{\mathbf{F}}(t)dt. \qquad \boxed{9.2}$$

The total impulse over the interval $t_f - t_i$ is

$$\vec{\mathbf{J}} \equiv \int_{t_i}^{t_f} \vec{\mathbf{F}}(t)dt. \qquad \boxed{9.3}$$

IMPULSE-MOMENTUM THEOREM

An impulse applied to a system changes the system's momentum, and that change of momentum is exactly equal to the impulse that was applied:

$$\vec{\mathbf{J}} = \Delta\vec{\mathbf{p}}. \qquad \boxed{9.7}$$

EXAMPLE 9.5

Calculating Force: Venus Williams' Tennis Serve

During the 2007 French Open, Venus Williams hit the fastest recorded serve in a premier women's match, reaching a speed of 58 m/s (209 km/h). What is the average force exerted on the 0.057-kg tennis ball by Venus Williams' racquet? Assume that the ball's speed just after impact is 58 m/s, as shown in Figure 9.13, that the initial horizontal component of the velocity before impact is negligible, and that the ball remained in contact with the racquet for 5.0 ms.

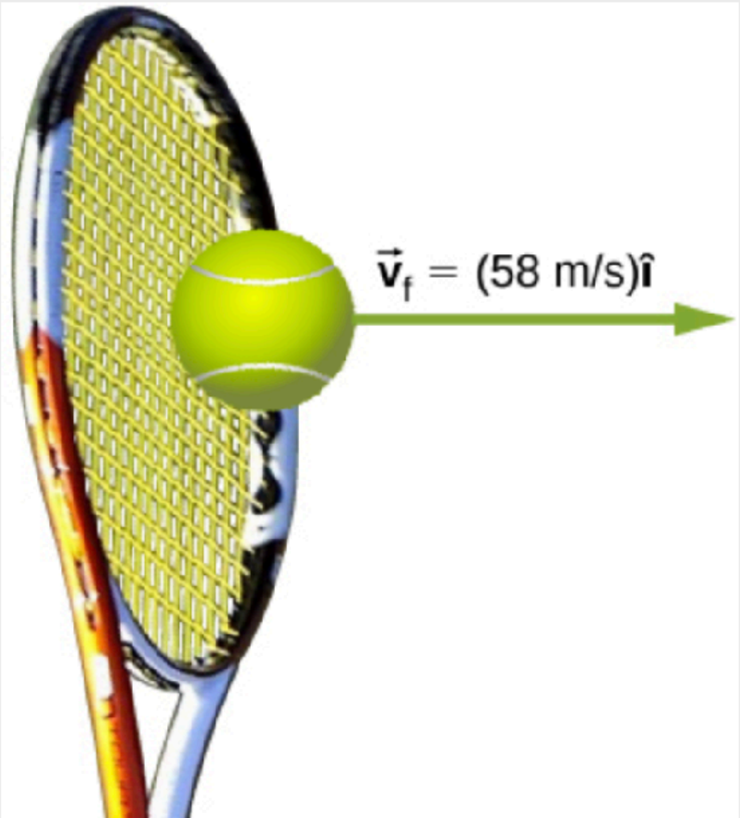

EXAMPLE 9.5

Calculating Force: Venus Williams' Tennis Serve

During the 2007 French Open, Venus Williams hit the fastest recorded serve in a premier women's match, reaching a speed of 58 m/s (209 km/h). What is the average force exerted on the 0.057-kg tennis ball by Venus Williams' racquet? Assume that the ball's speed just after impact is 58 m/s, as shown in Figure 9.13, that the initial horizontal component of the velocity before impact is negligible, and that the ball remained in contact with the racquet for 5.0 ms.

Solution

To determine the change in momentum, insert the values for the initial and final velocities into the equation above:

$$\begin{aligned}\Delta p &= m\left(v_{\mathrm{f}} - v_{\mathrm{i}}\right)\\ &= (0.057\ \mathrm{kg})\,(58\ \mathrm{m/s} - 0\ \mathrm{m/s})\\ &= 3.3\ \frac{\mathrm{kg{\cdot}m}}{\mathrm{s}}.\end{aligned}$$

Now the magnitude of the net external force can be determined by using

$$F = \frac{\Delta p}{\Delta t} = \frac{3.3\ \frac{\mathrm{kg{\cdot}m}}{\mathrm{s}}}{5.0 \times 10^{-3}\ \mathrm{s}} = 6.6 \times 10^{2}\ \mathrm{N}.$$

where we have retained only two significant figures in the final step.

Momentum in multiple dimensions

PROBLEM-SOLVING STRATEGY

Conservation of Momentum in Two Dimensions

The method for solving a two-dimensional (or even three-dimensional) conservation of momentum problem is generally the same as the method for solving a one-dimensional problem, except that you have to conserve momentum in both (or all three) dimensions simultaneously:

1. Identify a closed system.
2. Write down the equation that represents conservation of momentum in the x-direction, and solve it for the desired quantity. If you are calculating a vector quantity (velocity, usually), this will give you the x-component of the vector.
3. Write down the equation that represents conservation of momentum in the y-direction, and solve. This will give you the y-component of your vector quantity.
4. Assuming you are calculating a vector quantity, use the Pythagorean theorem to calculate its magnitude, using the results of steps 3 and 4.

Momentum in multiple dimensions

EXAMPLE 9.15

Exploding Scuba Tank

A common scuba tank is an aluminum cylinder that weighs 31.7 pounds empty (Figure 9.25). When full of compressed air, the internal pressure is between 2500 and 3000 psi (pounds per square inch). Suppose such a tank, which had been sitting motionless, suddenly explodes into three pieces. The first piece, weighing 10 pounds, shoots off horizontally at 235 miles per hour; the second piece (7 pounds) shoots off at 172 miles per hour, also in the horizontal plane, but at a $19°$ angle to the first piece. What is the mass and initial velocity of the third piece? (Do all work, and express your final answer, in SI units.)

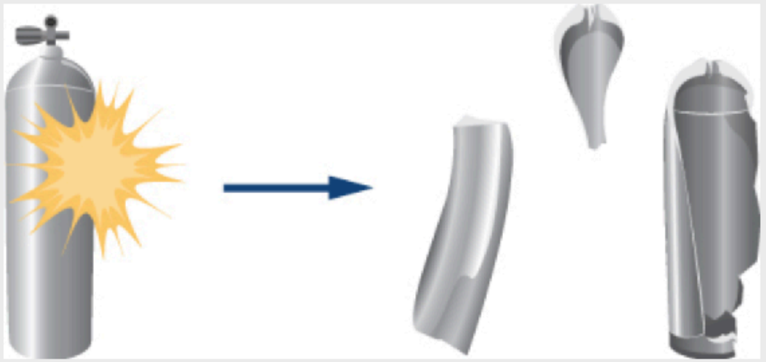

Figure 9.25 A scuba tank explodes into three pieces.

Momentum in multiple dimensions

EXAMPLE 9.15

Exploding Scuba Tank

A common scuba tank is an aluminum cylinder that weighs 31.7 pounds empty (Figure 9.25). When full of compressed air, the internal pressure is between 2500 and 3000 psi (pounds per square inch). Suppose such a tank, which had been sitting motionless, suddenly explodes into three pieces. The first piece, weighing 10 pounds, shoots off horizontally at 235 miles per hour; the second piece (7 pounds) shoots off at 172 miles per hour, also in the horizontal plane, but at a $19°$ angle to the first piece. What is the mass and initial velocity of the third piece? (Do all work, and express your final answer, in SI units.)

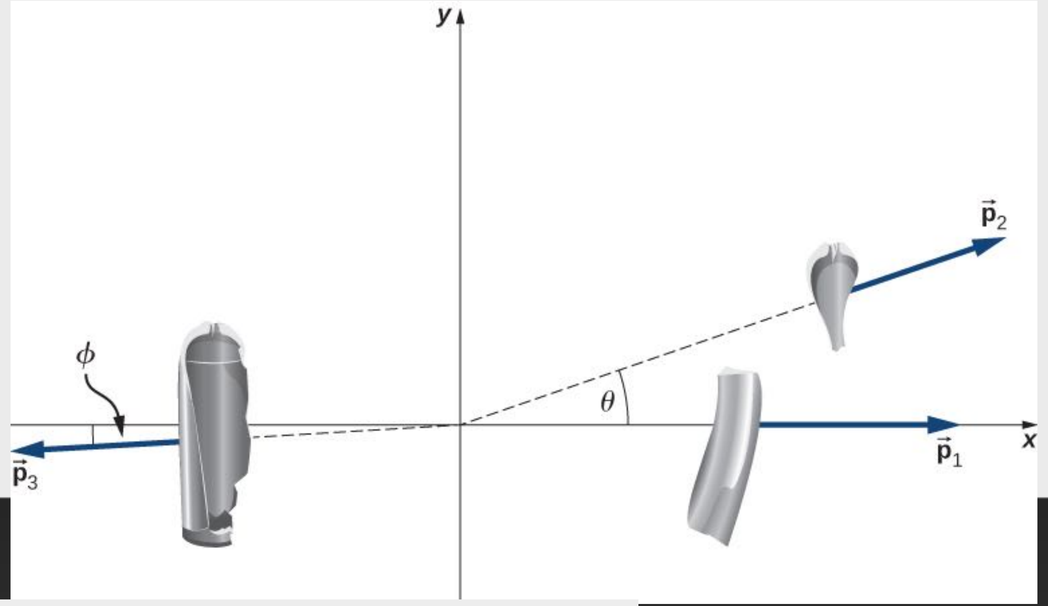

First, let's get all the conversions to SI units out of the way:

$$31.7\ \text{lb} \times \frac{1\ \text{kg}}{2.2\ \text{lb}} \rightarrow 14.4\ \text{kg}$$

$$10\ \text{lb} \rightarrow 4.5\ \text{kg}$$

$$235\ \frac{\text{miles}}{\text{hour}} \times \frac{1\ \text{hour}}{3600\ \text{s}} \times \frac{1609\ \text{m}}{\text{mile}} = 105\ \frac{\text{m}}{\text{s}}$$

$$7\ \text{lb} \rightarrow 3.2\ \text{kg}$$

$$172\ \frac{\text{mile}}{\text{hour}} = 77\ \frac{\text{m}}{\text{s}}$$

$$m_3 = 14.4\ \text{kg} - (4.5\ \text{kg} + 3.2\ \text{kg}) = 6.7\ \text{kg}.$$

Momentum in multiple dimensions

EXAMPLE 9.15

Exploding Scuba Tank

A common scuba tank is an aluminum cylinder that weighs 31.7 pounds empty (Figure 9.25). When full of compressed air, the internal pressure is between 2500 and 3000 psi (pounds per square inch). Suppose such a tank, which had been sitting motionless, suddenly explodes into three pieces. The first piece, weighing 10 pounds, shoots off horizontally at 235 miles per hour; the second piece (7 pounds) shoots off at 172 miles per hour, also in the horizontal plane, but at a $19°$ angle to the first piece. What is the mass and initial velocity of the third piece? (Do all work, and express your final answer, in SI units.)

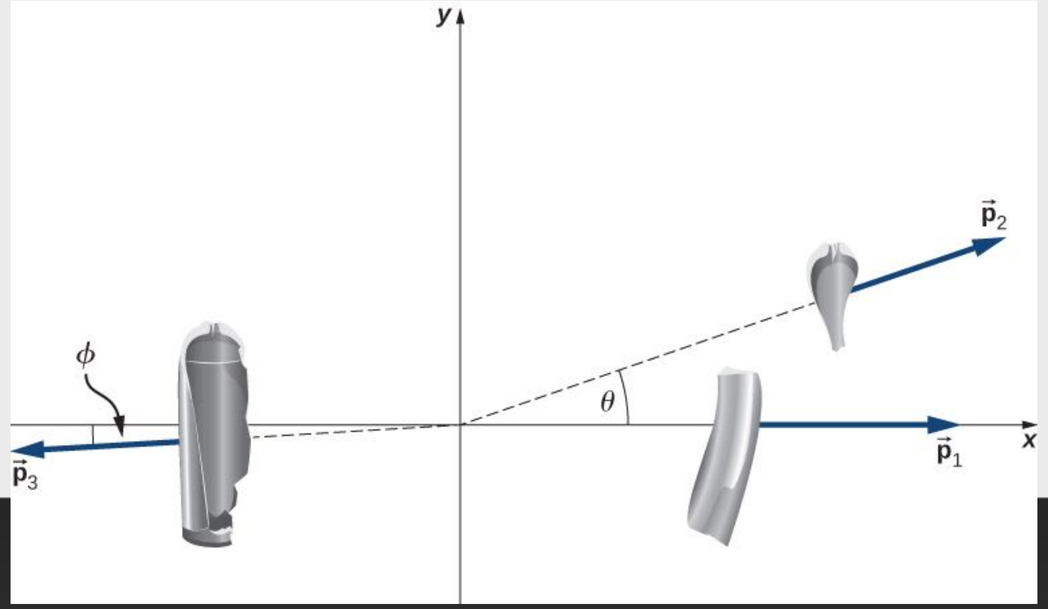

x-direction:

$$\begin{aligned} p_{f,x} &= p_{0,x} \\ p_{1,x} + p_{2,x} + p_{3,x} &= 0 \\ m_1 v_{1,x} + m_2 v_{2,x} + p_{3,x} &= 0 \\ p_{3,x} &= -m_1 v_{1,x} - m_2 v_{2,x} \end{aligned}$$

y-direction:

$$\begin{aligned} p_{f,y} &= p_{0,y} \\ p_{1,y} + p_{2,y} + p_{3,y} &= 0 \\ m_1 v_{1,y} + m_2 v_{2,y} + p_{3,y} &= 0 \\ p_{3,y} &= -m_1 v_{1,y} - m_2 v_{2,y} \end{aligned}$$

Momentum in multiple dimensions

EXAMPLE 9.15

Exploding Scuba Tank

A common scuba tank is an aluminum cylinder that weighs 31.7 pounds empty (Figure 9.25). When full of compressed air, the internal pressure is between 2500 and 3000 psi (pounds per square inch). Suppose such a tank, which had been sitting motionless, suddenly explodes into three pieces. The first piece, weighing 10 pounds, shoots off horizontally at 235 miles per hour; the second piece (7 pounds) shoots off at 172 miles per hour, also in the horizontal plane, but at a $19°$ angle to the first piece. What is the mass and initial velocity of the third piece? (Do all work, and express your final answer, in SI units.)

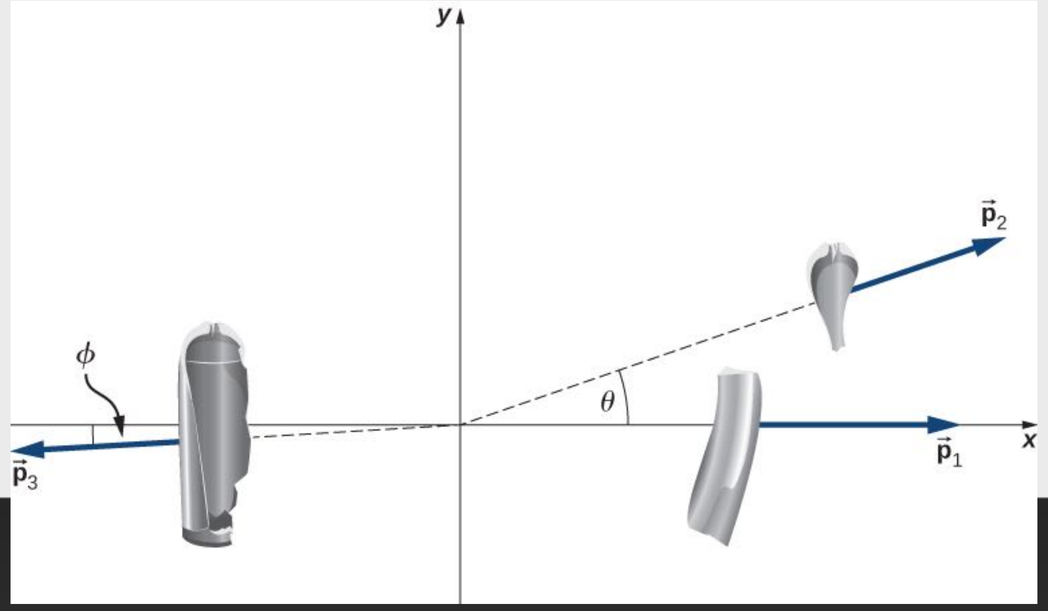

From our chosen coordinate system, we write the x-components as

$$\begin{aligned} p_{3,x} &= -m_1 v_1 - m_2 v_2 \cos\theta \\ &= -(4.5\text{ kg})\left(105\ \tfrac{\text{m}}{\text{s}}\right) - (3.2\text{ kg})\left(77\ \tfrac{\text{m}}{\text{s}}\right)\cos(19°) \\ &= -705\,\tfrac{\text{kg}\cdot\text{m}}{\text{s}}. \end{aligned}$$

For the y-direction, we have

$$\begin{aligned} p_{3y} &= 0 - m_2 v_2 \sin\theta \\ &= -(3.2\text{ kg})\left(77\ \tfrac{\text{m}}{\text{s}}\right)\sin(19°) \\ &= -80.2\ \tfrac{\text{kg}\cdot\text{m}}{\text{s}}. \end{aligned}$$

This gives the magnitude of p_3:

$$\begin{aligned} p_3 &= \sqrt{p_{3,x}^2 + p_{3,y}^2} \\ &= \sqrt{\left(-705\ \tfrac{\text{kg}\cdot\text{m}}{\text{s}}\right)^2 + \left(-80.2\ \tfrac{\text{kg}\cdot\text{m}}{\text{s}}\right)} \\ &= 710\ \tfrac{\text{kg}\cdot\text{m}}{\text{s}}. \end{aligned}$$

x-direction:

$$\begin{aligned} p_{f,x} &= p_{0,x} \\ p_{1,x} + p_{2,x} + p_{3,x} &= 0 \\ m_1 v_{1,x} + m_2 v_{2,x} + p_{3,x} &= 0 \\ p_{3,x} &= -m_1 v_{1,x} - m_2 v_{2,x} \end{aligned}$$

y-direction:

$$\begin{aligned} p_{f,y} &= p_{0,y} \\ p_{1,y} + p_{2,y} + p_{3,y} &= 0 \\ m_1 v_{1,y} + m_2 v_{2,y} + p_{3,y} &= 0 \\ p_{3,y} &= -m_1 v_{1,y} - m_2 v_{2,y} \end{aligned}$$

Momentum in multiple dimensions

EXAMPLE 9.15

Exploding Scuba Tank

A common scuba tank is an aluminum cylinder that weighs 31.7 pounds empty (Figure 9.25). When full of compressed air, the internal pressure is between 2500 and 3000 psi (pounds per square inch). Suppose such a tank, which had been sitting motionless, suddenly explodes into three pieces. The first piece, weighing 10 pounds, shoots off horizontally at 235 miles per hour; the second piece (7 pounds) shoots off at 172 miles per hour, also in the horizontal plane, but at a $19°$ angle to the first piece. What is the mass and initial velocity of the third piece? (Do all work, and express your final answer, in SI units.)

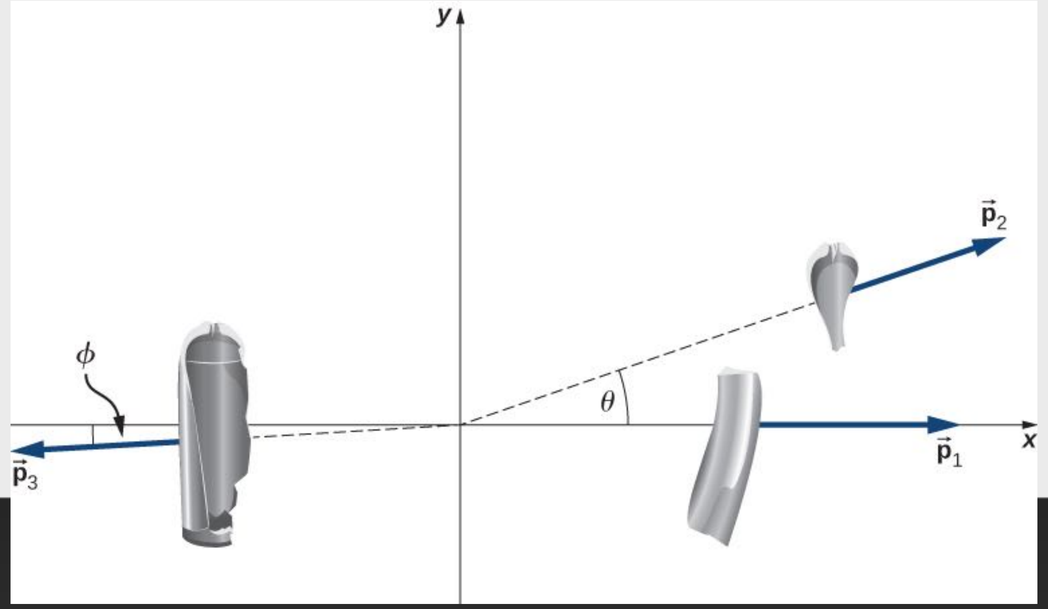

From our chosen coordinate system, we write the x-components as

$$\begin{aligned} p_{3,x} &= -m_1 v_1 - m_2 v_2 \cos\theta \\ &= -(4.5\text{ kg})\left(105\ \tfrac{\text{m}}{\text{s}}\right) - (3.2\text{ kg})\left(77\ \tfrac{\text{m}}{\text{s}}\right)\cos(19°) \\ &= -705\,\tfrac{\text{kg}\cdot\text{m}}{\text{s}}. \end{aligned}$$

For the y-direction, we have

$$\begin{aligned} p_{3y} &= 0 - m_2 v_2 \sin\theta \\ &= -(3.2\text{ kg})\left(77\ \tfrac{\text{m}}{\text{s}}\right)\sin(19°) \\ &= -80.2\ \tfrac{\text{kg}\cdot\text{m}}{\text{s}}. \end{aligned}$$

This gives the magnitude of p_3:

$$\begin{aligned} p_3 &= \sqrt{p_{3,x}^2 + p_{3,y}^2} \\ &= \sqrt{\left(-705\ \tfrac{\text{kg}\cdot\text{m}}{\text{s}}\right)^2 + \left(-80.2\ \tfrac{\text{kg}\cdot\text{m}}{\text{s}}\right)} \\ &= 710\ \tfrac{\text{kg}\cdot\text{m}}{\text{s}}. \end{aligned}$$

The velocity of the third piece is therefore

$$v_3 = \frac{p_3}{m_3} = \frac{710\ \frac{\text{kg}\cdot\text{m}}{\text{s}}}{6.7\text{ kg}} = 106\ \frac{\text{m}}{\text{s}}.$$

The direction of its velocity vector is the same as the direction of its momentum vector:

$$\phi = \tan^{-1}\left(\frac{p_{3,y}}{p_{3,x}}\right) = \tan^{-1}\left(\frac{80.2\ \frac{\text{kg}\cdot\text{m}}{\text{s}}}{705\ \frac{\text{kg}\cdot\text{m}}{\text{s}}}\right) = 6.49°.$$

Rocket Propulsion Derivation

Physical Analysis

Here's a description of what happens, so that you get a feel for the physics involved.

- As the rocket engines operate, they are continuously ejecting burned fuel gases, which have both mass and velocity, and therefore some momentum. By conservation of momentum, the rocket's momentum changes by this same amount (with the opposite sign). We will assume the burned fuel is being ejected at a constant rate, which means the rate of change of the rocket's momentum is also constant. By Equation 9.9, this represents a constant force on the rocket.
- However, as time goes on, the mass of the rocket (which includes the mass of the remaining fuel) continuously decreases. Thus, even though the force on the rocket is constant, the resulting acceleration is not; it is continuously increasing.
- So, the total change of the rocket's velocity will depend on the amount of mass of fuel that is burned, and that dependence is not linear.

The problem has the mass and velocity of the rocket changing; also, the total mass of ejected gases is changing. If we define our system to be the rocket + fuel, then this is a closed system (since the rocket is in deep space, there are no external forces acting on this system); as a result, momentum is conserved for this system. Thus, we can apply conservation of momentum to answer the question (Figure 9.33).

Rocket Propulsion Derivation

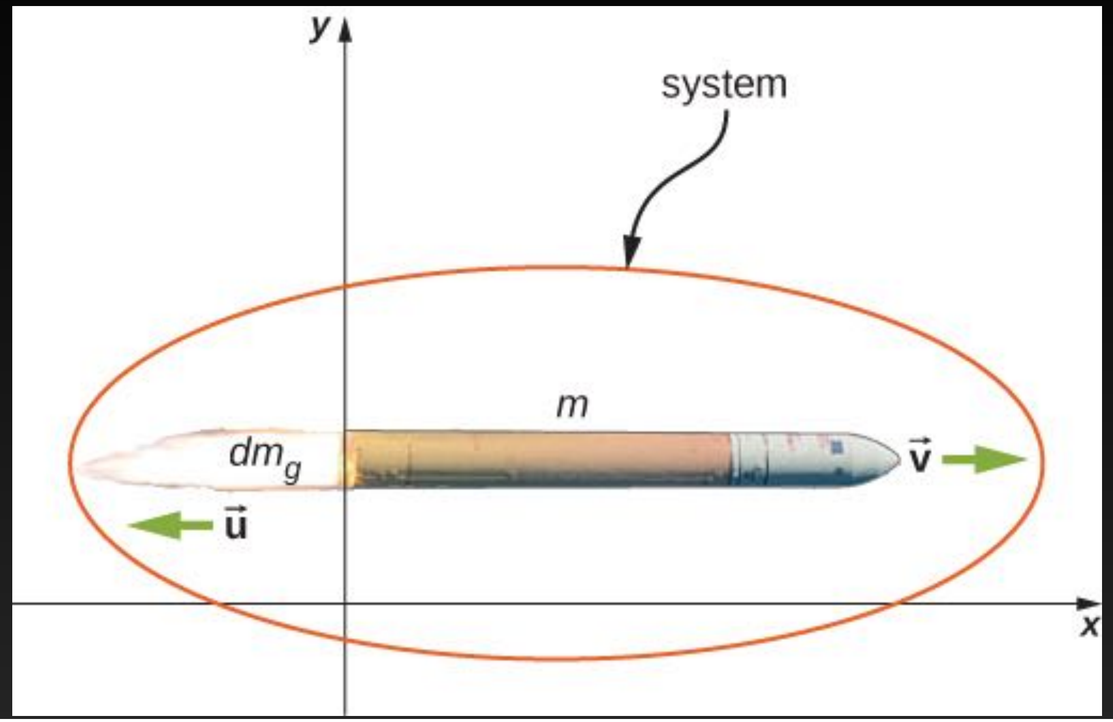

Physical Analysis

Here's a description of what happens, so that you get a feel for the physics involved.

- As the rocket engines operate, they are continuously ejecting burned fuel gases, which have both mass and velocity, and therefore some momentum. By conservation of momentum, the rocket's momentum changes by this same amount (with the opposite sign). We will assume the burned fuel is being ejected at a constant rate, which means the rate of change of the rocket's momentum is also constant. By Equation 9.9, this represents a constant force on the rocket.
- However, as time goes on, the mass of the rocket (which includes the mass of the remaining fuel) continuously decreases. Thus, even though the force on the rocket is constant, the resulting acceleration is not; it is continuously increasing.
- So, the total change of the rocket's velocity will depend on the amount of mass of fuel that is burned, and that dependence is not linear.

The problem has the mass and velocity of the rocket changing; also, the total mass of ejected gases is changing. If we define our system to be the rocket + fuel, then this is a closed system (since the rocket is in deep space, there are no external forces acting on this system); as a result, momentum is conserved for this system. Thus, we can apply conservation of momentum to answer the question (Figure 9.33).

Rocket Propulsion Derivation

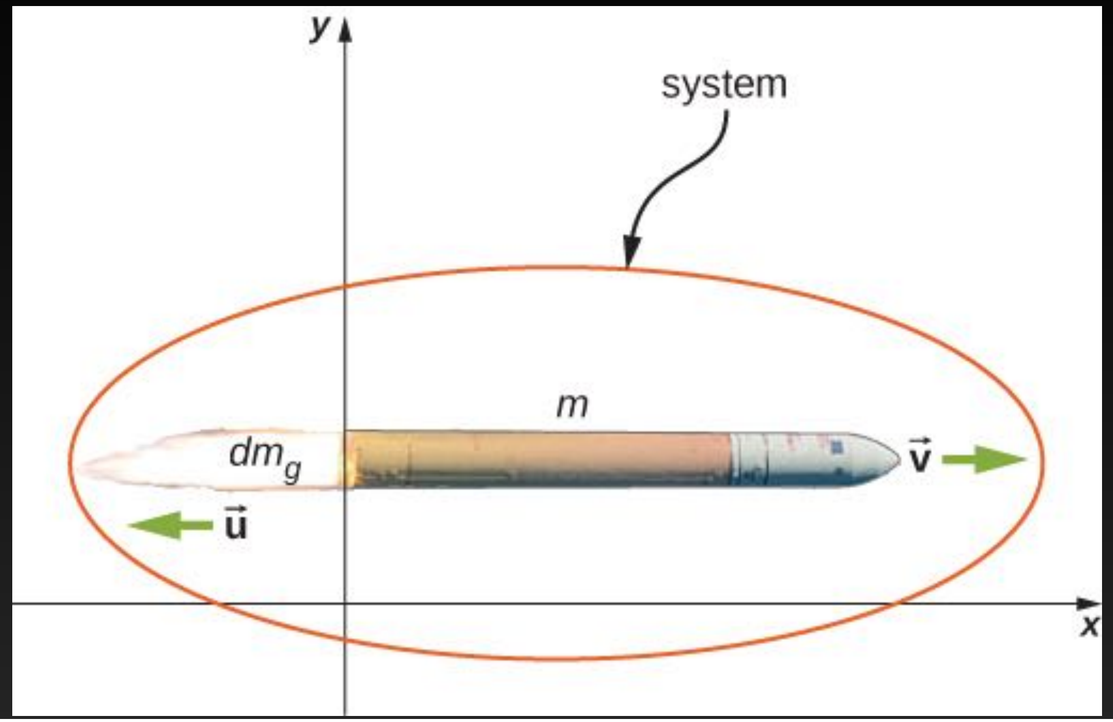

Physical Analysis

Here's a description of what happens, so that you get a feel for the physics involved.

- As the rocket engines operate, they are continuously ejecting burned fuel gases, which have both mass and velocity, and therefore some momentum. By conservation of momentum, the rocket's momentum changes by this same amount (with the opposite sign). We will assume the burned fuel is being ejected at a constant rate, which means the rate of change of the rocket's momentum is also constant. By Equation 9.9, this represents a constant force on the rocket.
- However, as time goes on, the mass of the rocket (which includes the mass of the remaining fuel) continuously decreases. Thus, even though the force on the rocket is constant, the resulting acceleration is not; it is continuously increasing.
- So, the total change of the rocket's velocity will depend on the amount of mass of fuel that is burned, and that dependence is not linear.

The problem has the mass and velocity of the rocket changing; also, the total mass of ejected gases is changing. If we define our system to be the rocket + fuel, then this is a closed system (since the rocket is in deep space, there are no external forces acting on this system); as a result, momentum is conserved for this system. Thus, we can apply conservation of momentum to answer the question (Figure 9.33).

Since all vectors are in the x-direction, we drop the vector notation. Applying conservation of momentum, we obtain

$$\begin{aligned} p_i &= p_f \\ mv &= \left(m - dm_g\right)(v + dv) + dm_g(v - u) \\ mv &= mv + mdv - dm_g v - dm_g dv + dm_g v - dm_g u \\ mdv &= dm_g dv + dm_g u. \end{aligned}$$

Now, dm_g and dv are each very small; thus, their product $dm_g dv$ is very, very small, much smaller than the other two terms in this expression. We neglect this term, therefore, and obtain:

$$mdv = dm_g u.$$

Our next step is to remember that, since dm_g represents an increase in the mass of ejected gases, it must also represent a decrease of mass of the rocket:

$$dm_g = -dm.$$

Replacing this, we have

$$mdv = -dmu$$

or

$$dv = -u\frac{dm}{m}.$$

Integrating from the initial mass m_0 to the final mass m of the rocket gives us the result we are after:

$$\begin{aligned} \int_{v_i}^{v} dv &= -u\int_{m_0}^{m} \frac{1}{m}dm \\ v - v_i &= u\ln\left(\frac{m_0}{m}\right) \end{aligned}$$

and thus our final answer is

$$\Delta v = u\ln\left(\frac{m_0}{m}\right). \qquad \boxed{9.38}$$

Clicker Questions

CQ.11.3

For how long should a force of $130.0\,\mathrm{N}$ be applied to an object of mass $50.0\,\mathrm{kg}$ to change its speed from $20.0\,\mathrm{m/s}$ to $60.0\,\mathrm{m/s}$?

a) $0.031\,\mathrm{s}$

b) $0.065\,\mathrm{s}$

c) $15.4\,\mathrm{s}$

d) $40.0\,\mathrm{s}$

A	B	C	D	E

CQ.11.4

Cars these days have parts that can crumple or collapse in the event of an accident. What is the advantage of this?

a) It reduces injury to the passengers by increasing the time of impact.

b) It reduces injury to the passengers by decreasing the time of impact.

c) It reduces injury to the passengers by increasing the change in momentum.

d) It reduces injury to the passengers by decreasing the change in momentum.

A	B	C	D	E

CQ.11.5

A person with mass $65\ \mathrm{kg}$, standing still, throws an object at $4\ \mathrm{m/s}$. If the recoil velocity of the person is $3.5\ \mathrm{m/s}$, what is the mass of the object? Assume the surface to be frictionless.

a) $-65\ \mathrm{kg}$

b) $-56.8\ \mathrm{kg}$

c) $56.8\ \mathrm{kg}$

d) $65\ \mathrm{kg}$

A	B	C	D	E

Key Equations

External forces	$\vec{\mathbf{F}}_{\text{ext}} = \sum_{j=1}^{N} \frac{d\vec{\mathbf{p}}_j}{dt}$
Newton's second law for an extended object	$\vec{\mathbf{F}} = \frac{d\vec{\mathbf{p}}_{\text{CM}}}{dt}$
Acceleration of the center of mass	$\vec{\mathbf{a}}_{\text{CM}} = \frac{d^2}{dt^2}\left(\frac{1}{M}\sum_{j=1}^{N} m_j\vec{\mathbf{r}}_j\right) = \frac{1}{M}\sum_{j=1}^{N} m_j\vec{\mathbf{a}}_j$
Position of the center of mass for a system of particles	$\vec{\mathbf{r}}_{\text{CM}} \equiv \frac{1}{M}\sum_{j=1}^{N} m_j\vec{\mathbf{r}}_j$
Velocity of the center of mass	$\vec{\mathbf{v}}_{\text{CM}} = \frac{d}{dt}\left(\frac{1}{M}\sum_{j=1}^{N} m_j\vec{\mathbf{r}}_j\right) = \frac{1}{M}\sum_{j=1}^{N} m_j\vec{\mathbf{v}}_j$
Position of the center of mass of a continuous object	$\vec{\mathbf{r}}_{\text{CM}} \equiv \frac{1}{M}\int \vec{\mathbf{r}}\, dm$
Rocket equation	$\Delta v = u \ln\left(\frac{m_i}{m}\right)$

Key Equations

Definition of momentum	$\vec{\mathbf{p}} = m\vec{\mathbf{v}}$
Impulse	$\vec{J} \equiv \int_{t_i}^{t_f} \vec{F}(t)dt$ or $\vec{\mathbf{J}} = \vec{\mathbf{F}}_{\text{ave}}\Delta t$
Impulse-momentum theorem	$\vec{\mathbf{J}} = \Delta\vec{\mathbf{p}}$
Average force from momentum	$\vec{\mathbf{F}} = \frac{\Delta\vec{\mathbf{p}}}{\Delta t}$
Instantaneous force from momentum (Newton's second law)	$\vec{\mathbf{F}}(t) = \frac{d\vec{\mathbf{p}}}{dt}$
Conservation of momentum	$\frac{d\vec{\mathbf{p}}_1}{dt} + \frac{d\vec{\mathbf{p}}_2}{dt} = 0$ or $\vec{\mathbf{p}}_1 + \vec{\mathbf{p}}_2 = \text{constant}$
Generalized conservation of momentum	$\sum_{j=1}^{N} \vec{\mathbf{p}}_j = \text{constant}$
Conservation of momentum in two dimensions	$p_{f,x} = p_{1,i,x} + p_{2,i,x}$ $p_{f,y} = p_{1,i,y} + p_{2,i,y}$

Activity:
Worked Problems

WP 11.2

37 . The figure below shows a bullet of mass 200 g traveling horizontally towards the east with speed 400 m/s, which strikes a block of mass 1.5 kg that is initially at rest on a frictionless table.

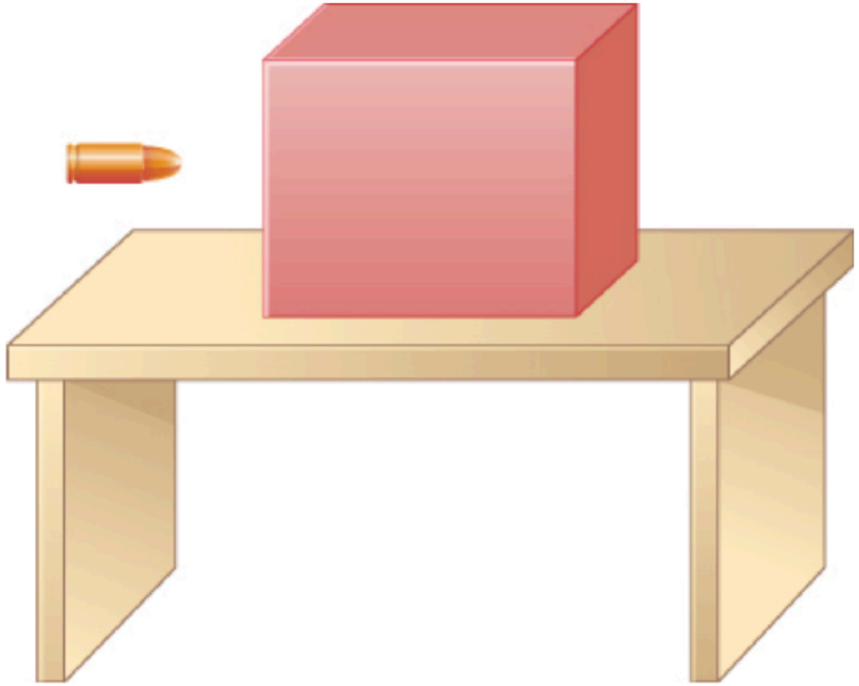

After striking the block, the bullet is embedded in the block and the block and the bullet move together as one unit.

a. What is the magnitude and direction of the velocity of the block/bullet combination immediately after the impact?
b. What is the magnitude and direction of the impulse by the block on the bullet?
c. What is the magnitude and direction of the impulse from the bullet on the block?
d. If it took 3 ms for the bullet to change the speed from 400 m/s to the final speed after impact, what is the average force between the block and the bullet during this time?

Revisiting the Bullet Block problem...

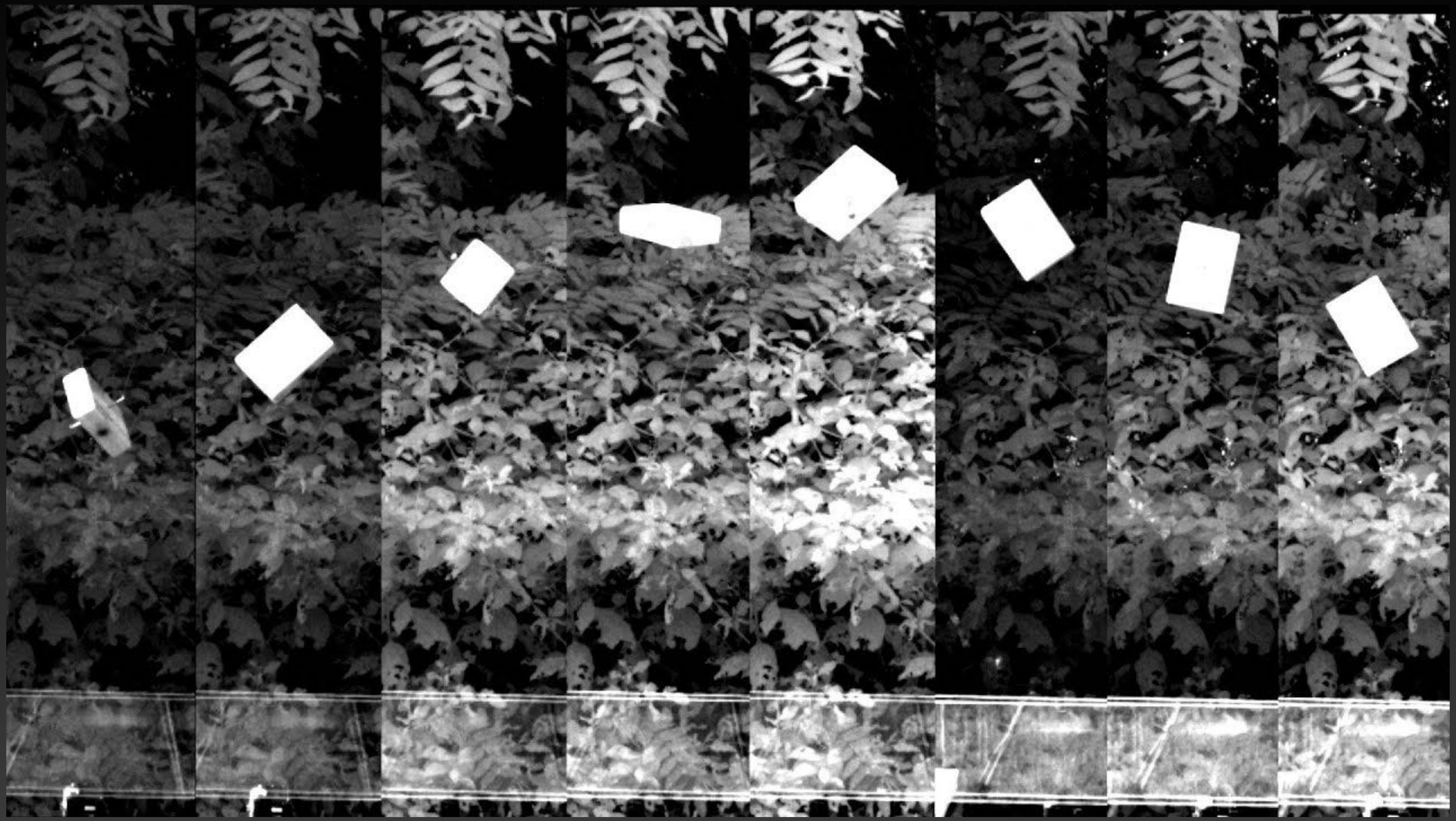

Did we just violate Conservation of Energy?

See you next class!

Attribution